SZU - zajedničkog uvoda na visokim frekv

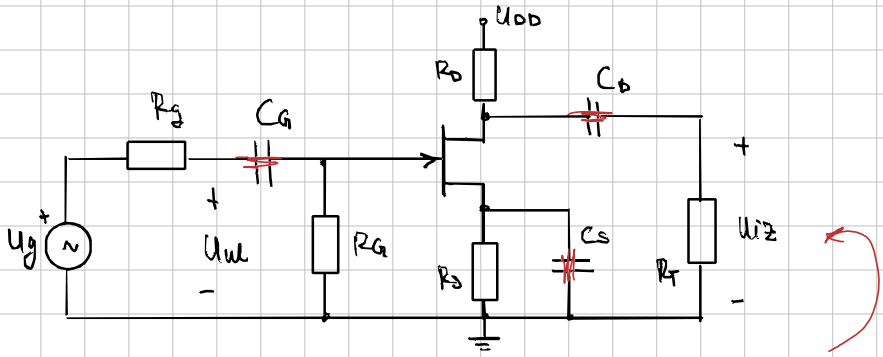

C_G, C_S i C_D sigurno moraju biti K.S kada proučavamo visoke fr.

$\Longrightarrow$ jer su do srednjih frekv već postali K.S

$\longrightarrow$ jedini „problem" stvara tranzistor"

Nadomjesna shema:

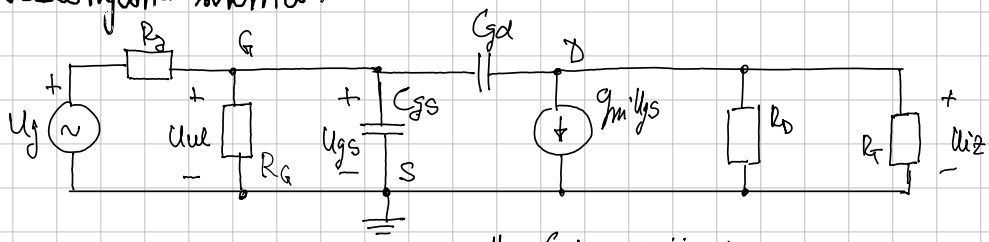

$\Downarrow$ Cgd razdvojimo:

* nekad imamo rd

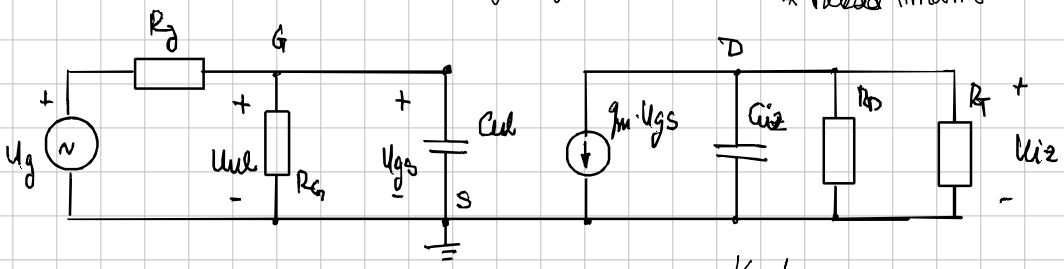

$$C_{ul} = C_{gs} + C_{gd}(1-K) \qquad C_{iz} = C_{gd}\frac{K-1}{K} \approx C_{gd}$$

$$K = \frac{U_{iz}}{U_{gs}} = \frac{U_{iz}}{U_{ul}} = A_v$$

$$A_v(j\omega) = \frac{U_{iz}}{U_{ul}} = A_{v0}\cdot\frac{1}{1+j\frac{\omega}{\omega_{ul}}}\cdot\frac{1}{1+j\frac{\omega}{\omega_{iz}}}$$

$$\boxed{\omega_{iz}} = \frac{1}{\tau_{iz}} = \frac{1}{C_{iz}(R_D \| R_T)}$$

$$\boxed{\omega_{ul}} = \frac{1}{\tau_{ul}} = \frac{1}{C_{ul}\cdot 0} \Longrightarrow \omega_{ul} = \infty, \quad f_{ul} = \infty$$

$0 \rightarrow$ ul = K.S

$$\longrightarrow \boxed{A_v(j\omega) = A_{v0}\cdot\frac{1}{1+j\frac{\omega}{\omega_{iz}}}}$$

$$A_{vg} = A_{vg0}\cdot\frac{1}{\left(1+j\frac{\omega}{\omega_{ul}}\right)\left(1+j\frac{\omega}{\omega_{iz}}\right)} \qquad \omega_{ul} = \frac{1}{C_{ul}(R_G \| R_g)}$$

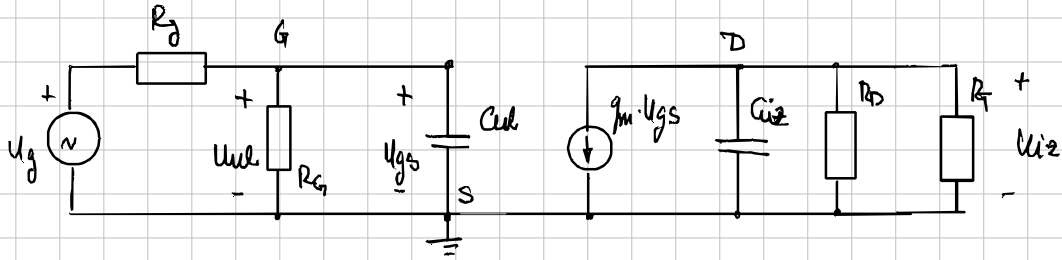

$A_{v0} = ? = \frac{U_{iz}}{U_{ul}}$ uz odspojene kond $= \frac{-g_m \cdot \cancel{U_{gs}} (R_D \| R_T)}{\cancel{U_{gs}}} = -g_m (R_D \| R_T)$

Gornja granična frekv: $\omega_g = \omega_{iz}$; $\omega_g = \min\{\omega_{ul}, \omega_{iz}\}$

Primjer 5.6.)

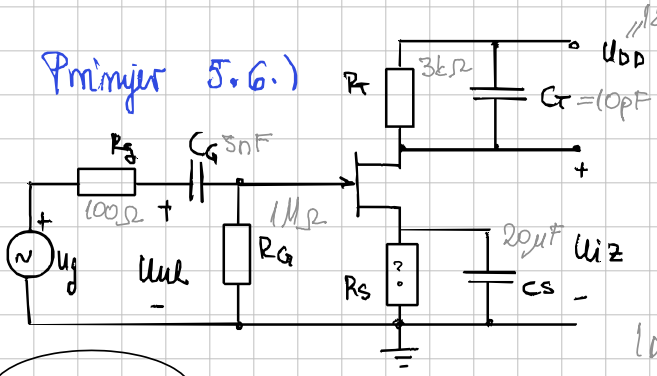

$A_{vg} = ? = \frac{U_{iz}}{U_g}$

$\omega_g = ?$

$C_{gs} = 3pF$ $C_{gd} = 2pF$

$I_{DSS} = 16mA$ $U_P = -2V$

$I_{DQ} = 1mA$

STATIKA → odspojimo sve kond.

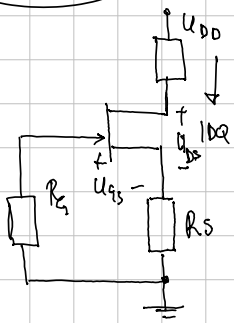

→ kroz R_G ne teče struja (nema otkud) ⟹ $U_G = \emptyset$

$-\underbrace{U_G}_{=0} + \emptyset + U_{GS} + R_S \cdot I_{DQ} = 0 \rightarrow \emptyset = U_{GS} + R_S \cdot I_{DQ}$

$R_S = \frac{-U_{GSQ}}{I_{DQ}}$

$I_{DQ} = I_{DSS}\left(1 - \frac{U_{GSQ}}{U_P}\right)^2 \Rightarrow U_{GSQ} = \dots = \begin{cases} \cancel{-2V} \\ -1{,}5V \end{cases}$

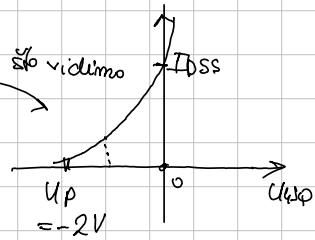

$\rightarrow R_S = 1500\,\Omega$

Dinamički parametri: $g_m = \frac{\partial I_{DQ}}{\partial U_{GSQ}} = I_{DSS} \cdot 2\left(1 - \frac{U_{GSQ}}{U_P}\right)\left(\frac{-1}{U_P}\right)$

$$\boxed{g_m = \dots = 4\,mA/V}$$

$r_d = ?$ → porast struje se zanemaruje ⟹ $r_d = \infty$

Dinamika

C_G, C_T i C_S su k.s.

$$K = \frac{u_{iz}}{u_{gs}}$$

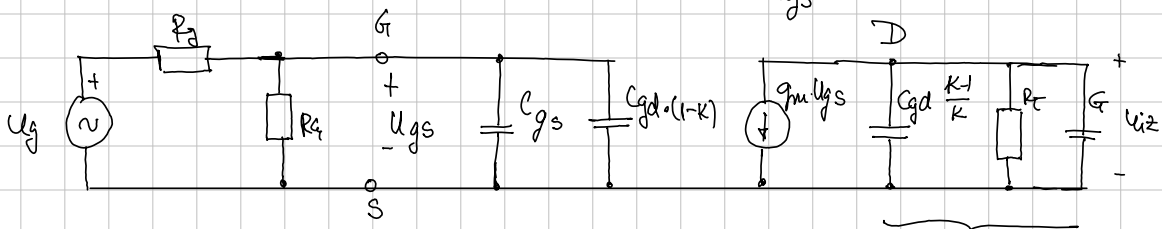

$C_{ul} = C_{gs} + C_{gd}(1-K)$ $\qquad$ $C_{iz} = C_{gd}\frac{K-1}{K} + C_T$

$C_{gs} = 3pF$

$C_{gd} = 2pF$

$C_T = 10pF$ $\qquad K = \frac{u_{iz}}{u_{gs}}$

---> srednji frekv:

$$K = \frac{-g_m \cdot \cancel{u_{gs}} \cdot R_T}{\cancel{u_{gs}}} = -g_m \cdot R_T \Rightarrow \boxed{K = -12}$$

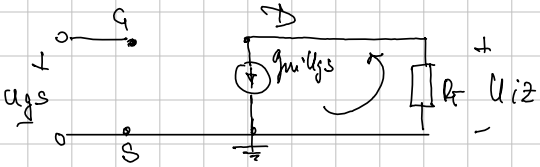

$$C_{ul} = C_{gs} + C_{gd}(1-K) = 3pF + 2pF(1+12) = 29pF = C_{ul}$$

C_{iz}

a) $C_T = \emptyset \Rightarrow C_{iz} = C_{gd}\frac{K-1}{K} \approx C_{gd} \rightarrow C_{iz} = 2{,}17pF$

b) $C_T = 10pF \Rightarrow C_{iz}' = C_{iz} + C_T = \rightarrow C_{iz}' = 12{,}17pF$

$$A_{vg}(j\omega) = A_{vg0} \cdot \frac{1}{\left(1 + j\frac{\omega}{\omega_{ul}}\right)\left(1 + j\frac{\omega}{\omega_{iz}}\right)}$$

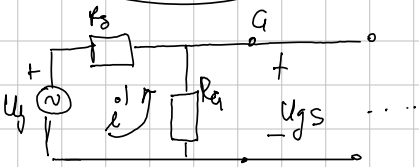

$$\Rightarrow A_{vg0}: \frac{u_{iz}}{u_g} = \underbrace{\frac{u_{iz}}{u_{gs}}}_{K} \cdot \frac{u_{gs}}{u_g} = K \cdot \frac{\cancel{i} \cdot R_g}{\cancel{i} \cdot (R_G + R_g)} = K \cdot \frac{R_G}{R_G + R_g} = \dots = \underbrace{\boxed{-12}}_{A_{vg0}}$$

$$\boxed{A_{vg0} = K = -12}$$

$\forall u_g = k.s$

$\boxed{\omega_{ul}} = \frac{1}{\tau_{ul}} = \frac{1}{C_{ul}\,(R_G \| R_g)} = \dots = 345 \times 10^6\ rad/s$ $\quad f_{ul} = 54.9\,MHz$

$\boxed{\omega_{iz}}$

a) $C_T = 0 \Rightarrow \frac{1}{\tau_{iz}} = \frac{1}{C_{iz} \cdot R_T} = \dots = 154 \times 10^6\ rad/s$

$f_{iz} = 24.4\,MHz$

→ možemo li s ovime odrediti ω_g? (f_g)?

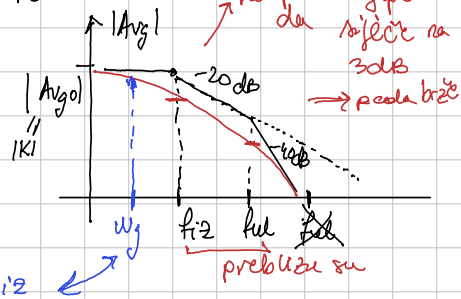

$\Rightarrow \omega_g = \frac{1}{\sum \tau_i} = \frac{1}{\frac{1}{\omega_{ul}} + \frac{1}{\omega_{iz}}}$; $f_g = \frac{1}{\frac{1}{f_{ul}} + \frac{1}{f_{iz}}}$

dobijeno broj manji i od ω_{ul} i od ω_{iz}

b) $C = 10\,pF \rightarrow \frac{1}{\tau_{iz}} = \frac{1}{C'_{iz} \cdot R_T} = \dots = 27.4 \times 10^6\ rad/s$

$f'_{iz} = 4.36\,MHz$

$f_{ul} = 54.9\,MHz$

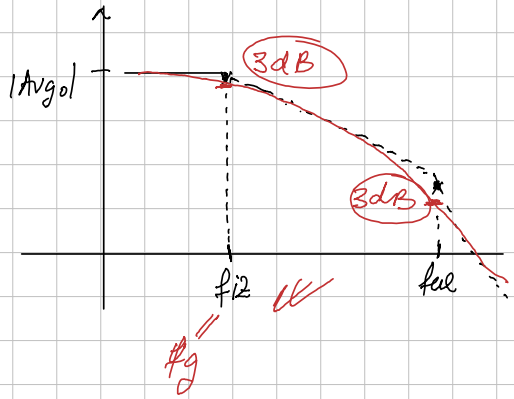

ovdje vrijedi da je

$f_{ul} \geq 4 \cdot f_{iz}$ ✓ → $\boxed{f_g = f_{iz}}$